FORD SUPER DUTY AXLE TRUSS (SD66)

SD66 PART LIST		
ITEM	QTY	PART NUMBER
1	1	SD66.1
2	2	SD66.2
3	1	SD66.3
4	2	SD66.4
5	1	SD66.5
6	1	SD66.6
7	1	SD66.7
8	1	SD66.8
9	1	SD66.9
10	1	SD66.10
11	1	SD66.11
12	1	SD66.12
13	1	SD66.13
14	1	SD66.14
15	1	SD66.15
16	1	SD66.16
17	1	SD66.17
18	1	SD66.18

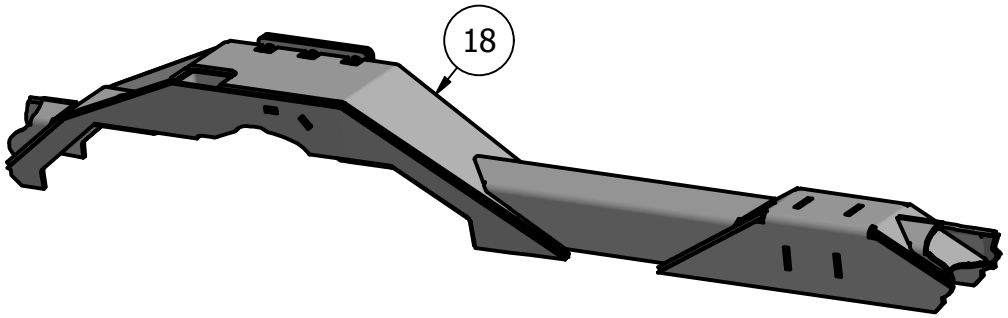

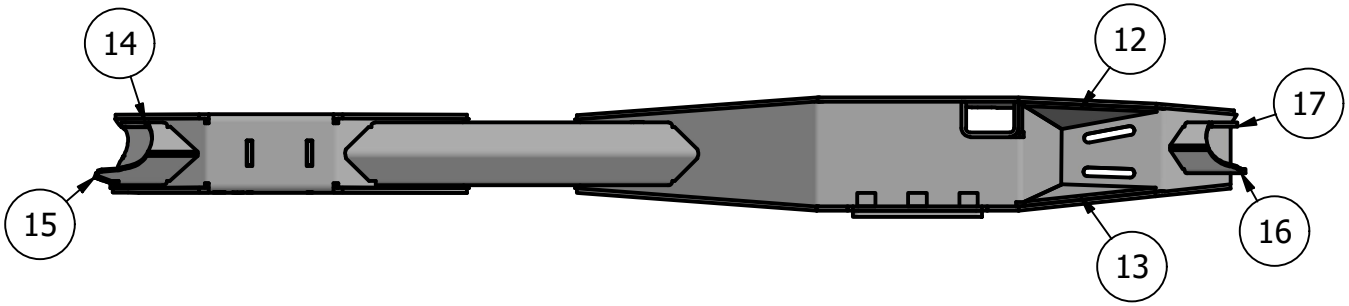

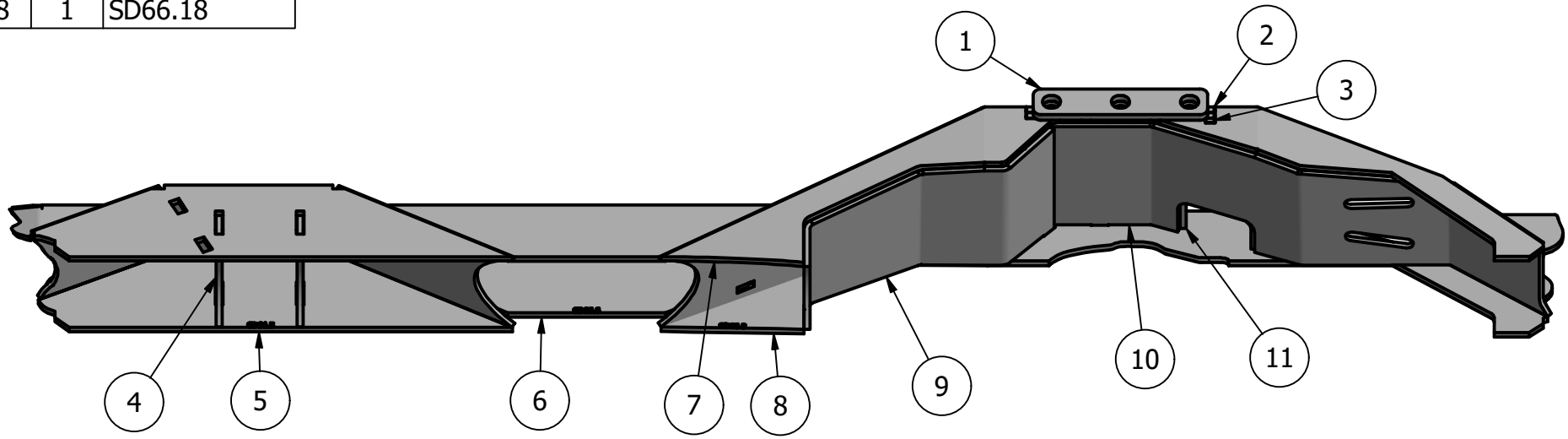

FORD SUPER DUTY AXLE TRUSS (SD66)

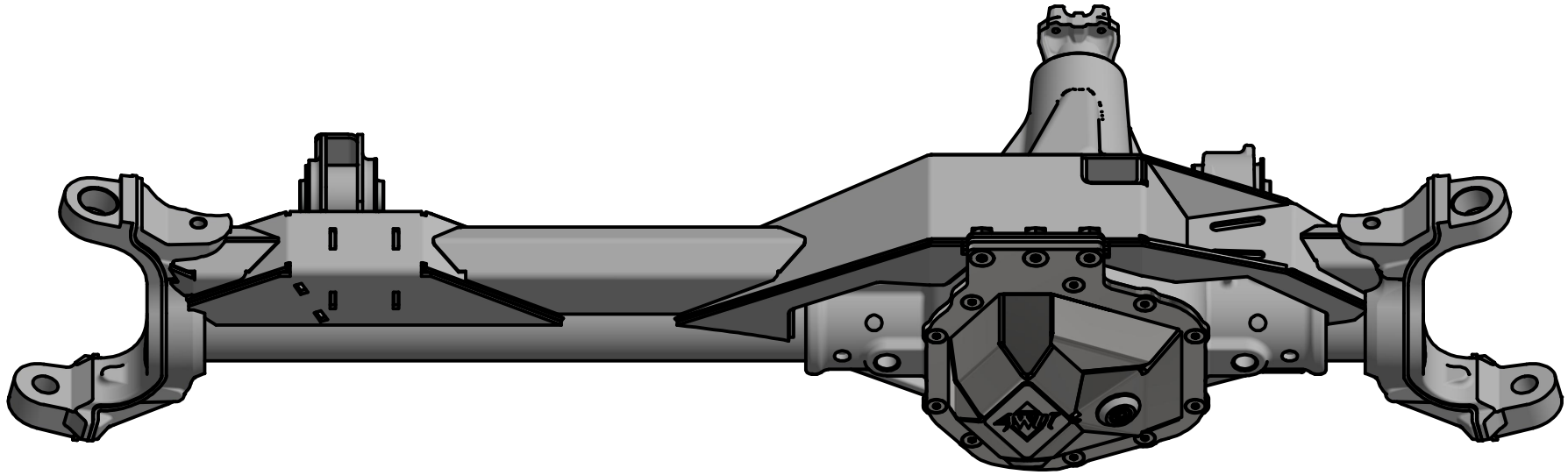

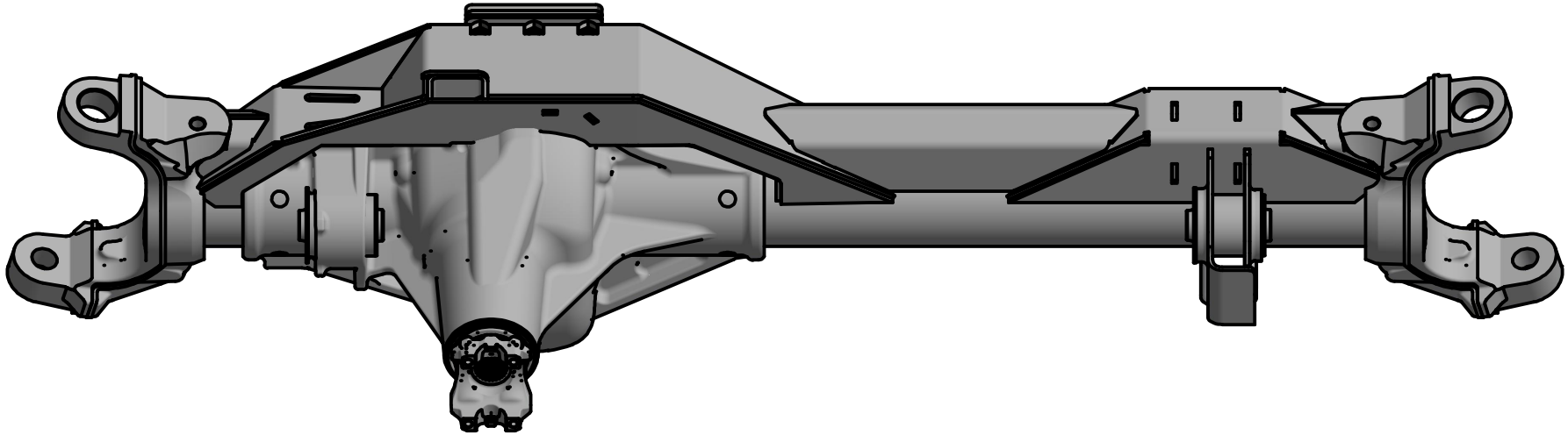

STEP 1: PREPARE THE AXLE HOUSING

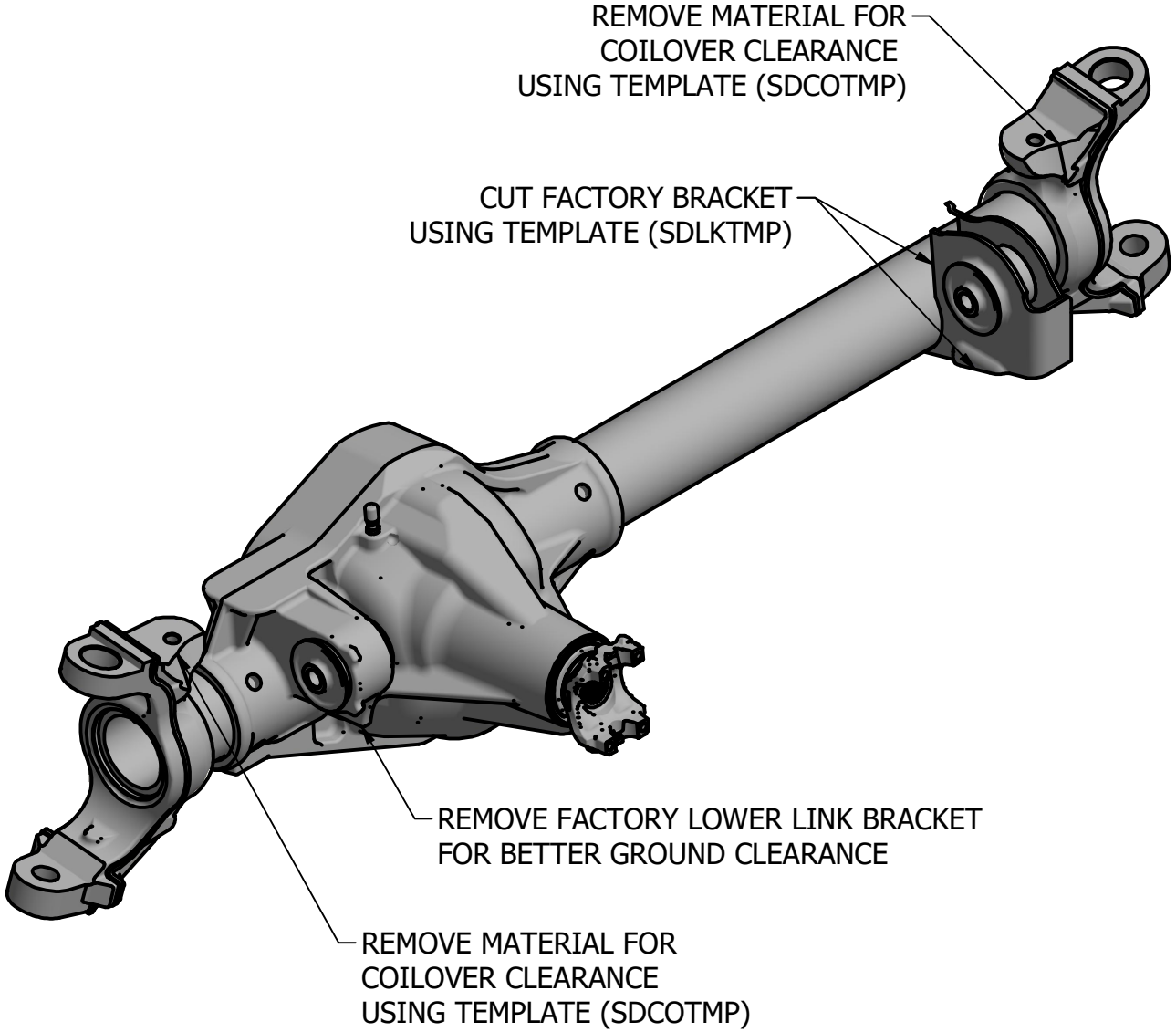

STEP 2: INSTALL DIFF COVER

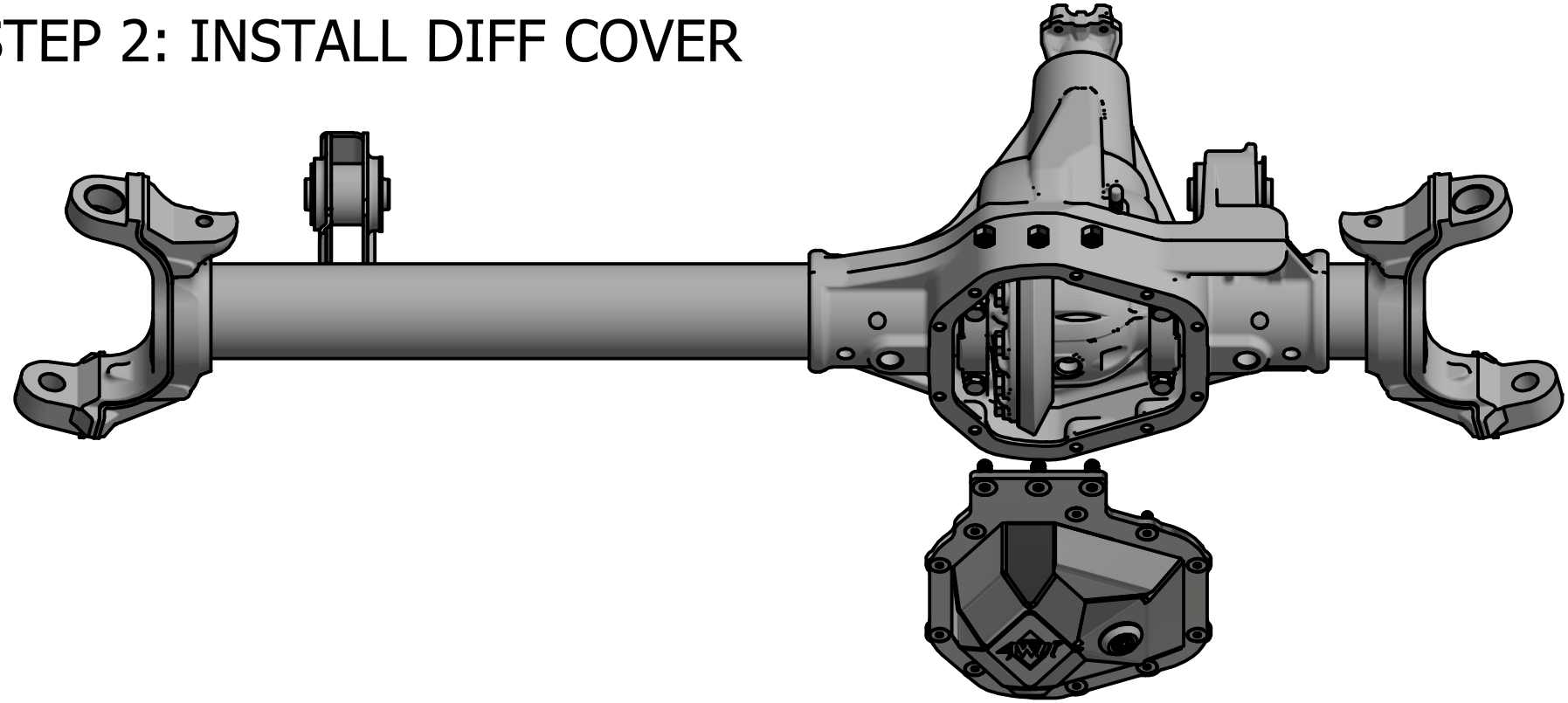

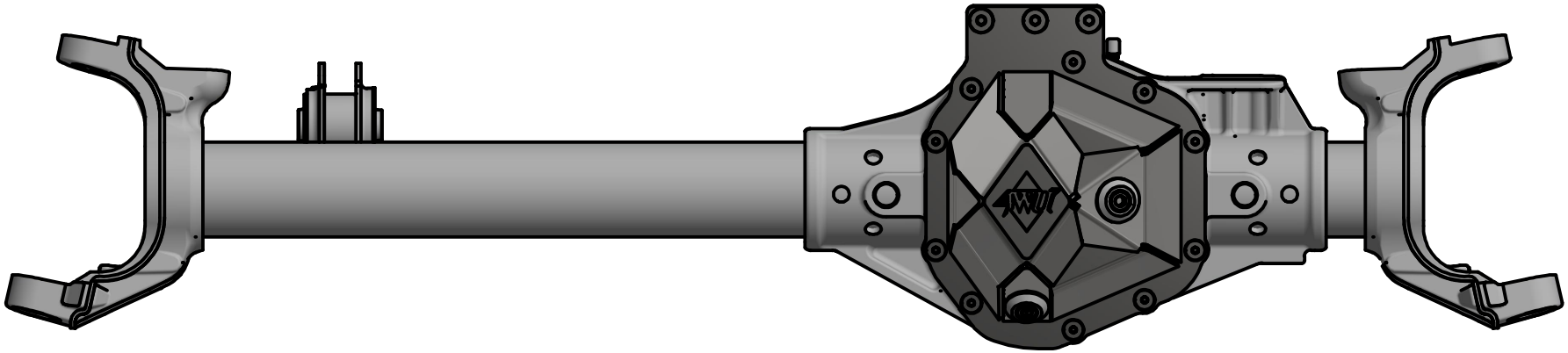

STEP 3: INSTALL DRIVER SIDE AXLE TRUSS

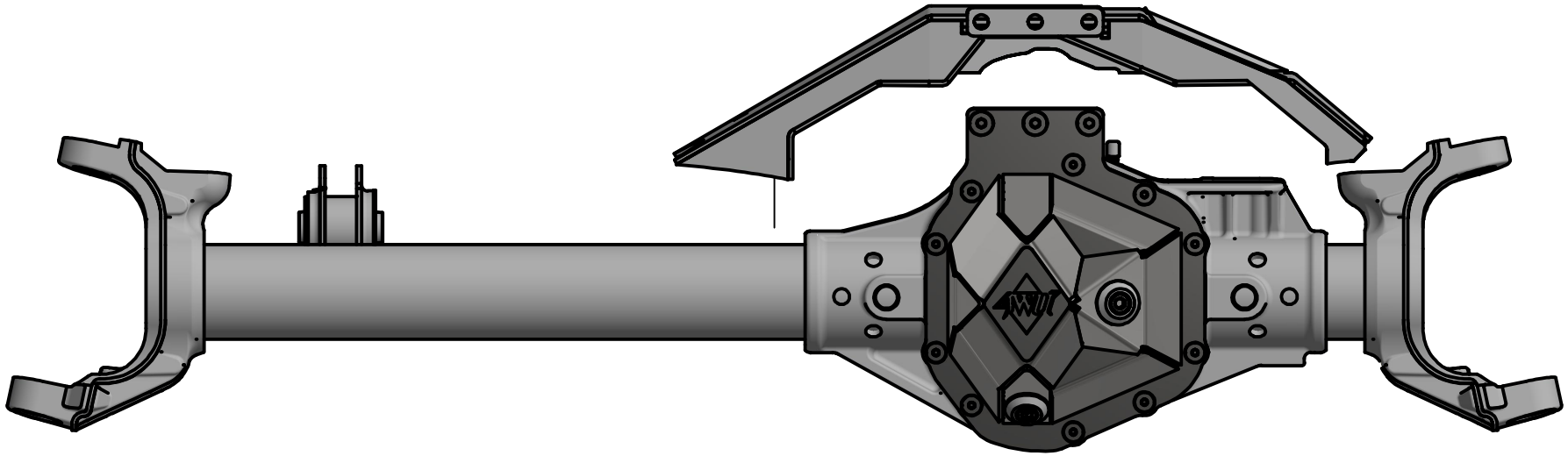

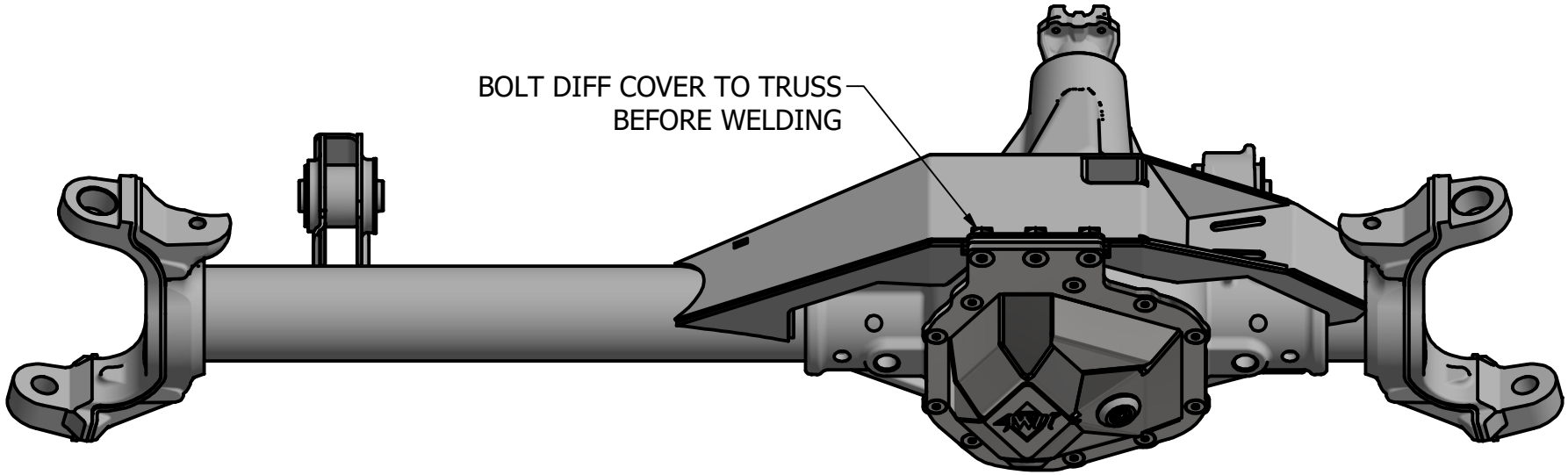

STEP 4: INSTALL PASSENGER SIDE AXLE TRUSS

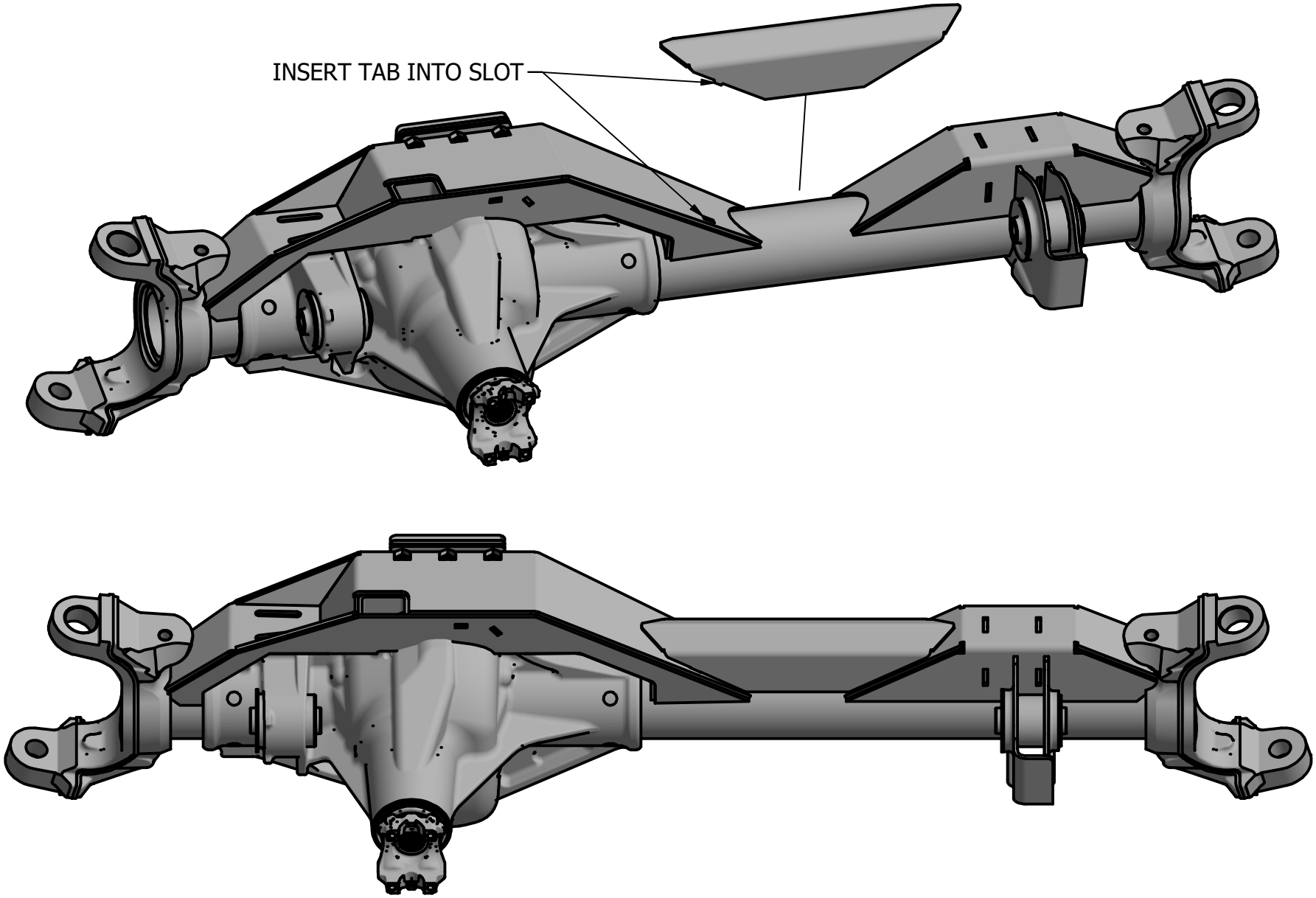
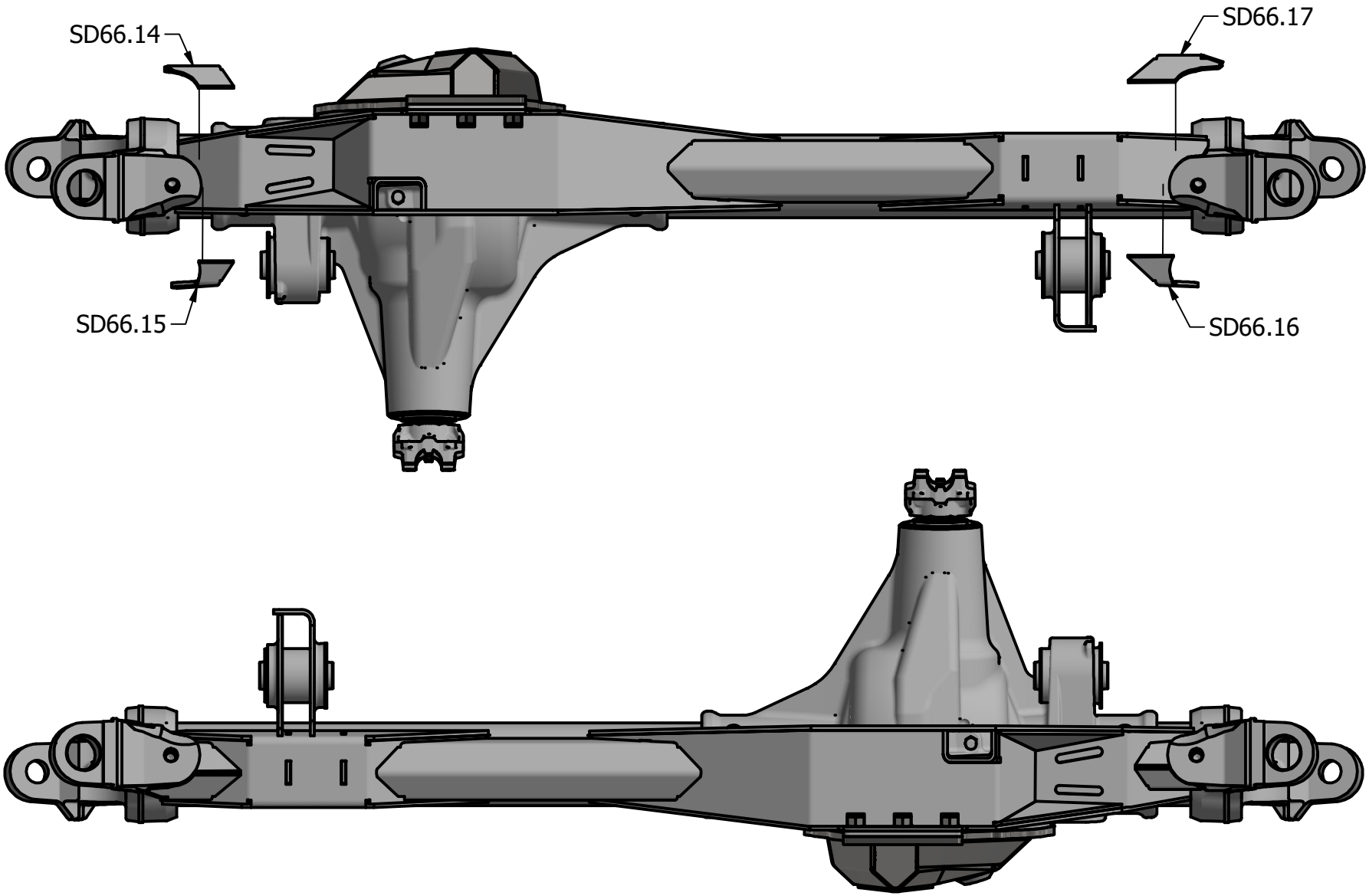
STEP 5: INSTALL AXLE C GUSSETS